1137 GIRATORY HANDLE

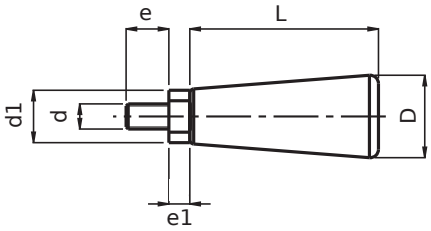

Giratory handle.
Forma T: Treated threaded steel stud.
PF: Black Duroplast FS 31 DIN 7708.

Code	D	d	d1	L	e	e1	Forma	Material	Color
113720501	0.79	M6	0.51	1.77	0.47	0.20	T	PF	Black
113724501	0.94	M8	0.63	2.09	0.59	0.22	T	PF	Black
113725501	0.98	M10	0.75	2.99	0.59	0.26	T	PF	Black
113728501	1.10	M12	0.83	3.62	0.59	0.28	T	PF	Black
113720510	0.79	1/4-20	0.51	1.77	0.47	0.20	T	PF	Black
113724510	0.94	5/16-18	0.63	2.09	0.59	0.22	T	PF	Black
113725510	0.98	3/8-16	0.75	2.99	0.59	0.26	T	PF	Black
113728510	1.10	1/2-13	0.83	3.62	0.59	0.28	T	PF	Black

1138 MTC C

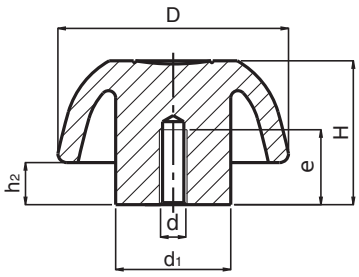

Forma C: Moulded thread.
PA: Black reinforced polyamide.

Code	D	H	d1	d	e	h2	Forma	Material	Color
113825101	0.98	0.67	0.49	M5	0.47	0.22	C	PA	Black
113832101	1.26	0.79	0.55	M6	0.59	0.23	C	PA	Black
113840101	1.57	1.00	0.68	M8	0.79	0.28	C	PA	Black
113850101	1.97	1.27	0.76	M10	0.94	0.33	C	PA	Black

1138 MTC K

RAL 7021
RAL 2004

Forma K: Threaded female brass insert.
PA: Black or Orange reinforced thermoplastic.

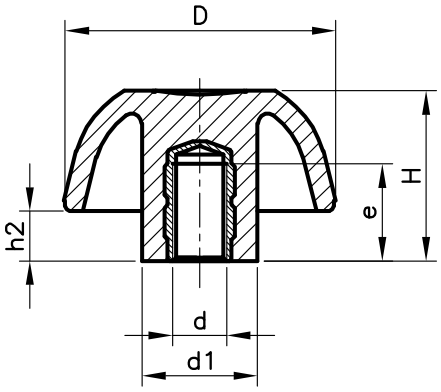

Code	D	H	d1	d	e	h2	Forma	Material	Color
113825302	0.98	0.67	0.49	M4	0.31	0.22	K	PA	Black
113825303	0.98	0.67	0.49	M5	0.35	0.22	K	PA	Black
113825301	0.98	0.67	0.49	M6	0.40	0.22	K	PA	Black
113832303	1.26	0.79	0.55	M5	0.35	0.23	K	PA	Black
113832301	1.26	0.79	0.55	M6	0.40	0.23	K	PA	Black
113840301	1.57	1.00	0.68	M6	0.40	0.28	K	PA	Black
113840302	1.57	1.00	0.68	M8	0.55	0.28	K	PA	Black
113840303	1.57	1.00	0.68	M10	0.66	0.28	K	PA	Black
113850301	1.97	1.27	0.76	M8	0.55	0.33	K	PA	Black
113850302	1.97	1.27	0.76	M10	0.66	0.33	K	PA	Black
113850308	1.97	1.27	0.76	M12	0.75	0.33	K	PA	Black
113863301	2.48	1.57	0.92	M10	0.66	0.43	K	PA	Black
113863302	2.48	1.57	0.92	M12	0.75	0.43	K	PA	Black
113863306	2.48	1.57	0.92	M16	1.06	0.43	K	PA	Black
113825342	0.98	0.67	0.49	M4	0.31	0.22	K	PA	Orange
113825343	0.98	0.67	0.49	M5	0.35	0.22	K	PA	Orange
113825341	0.98	0.67	0.49	M6	0.40	0.22	K	PA	Orange
113832343	1.26	0.79	0.55	M5	0.35	0.23	K	PA	Orange
113832341	1.26	0.79	0.55	M6	0.40	0.23	K	PA	Orange
113840341	1.57	1.00	0.68	M6	0.40	0.28	K	PA	Orange
113840342	1.57	1.00	0.68	M8	0.55	0.28	K	PA	Orange
113840343	1.57	1.00	0.68	M10	0.66	0.28	K	PA	Orange
113850341	1.97	1.27	0.76	M8	0.55	0.33	K	PA	Orange
113850342	1.97	1.27	0.76	M10	0.66	0.33	K	PA	Orange
113850345	1.97	1.27	0.76	M12	0.75	0.33	K	PA	Orange
113863341	2.48	1.57	0.92	M10	0.66	0.43	K	PA	Orange
113863342	2.48	1.57	0.92	M12	0.75	0.43	K	PA	Orange
113863344	2.48	1.57	0.92	M16	1.06	0.43	K	PA	Orange
113825304	0.98	0.67	0.49	10-24	0.35	0.22	K	PA	Black
113825305	0.98	0.67	0.49	1/4-20	0.40	0.22	K	PA	Black
113832304	1.26	0.79	0.55	10-24	0.35	0.23	K	PA	Black
113832305	1.26	0.79	0.55	1/4-20	0.40	0.23	K	PA	Black
113840307	1.57	1.00	0.68	1/4-20	0.40	0.28	K	PA	Black
113840308	1.57	1.00	0.68	5/16-18	0.55	0.28	K	PA	Black
113850305	1.97	1.27	0.76	5/16-18	0.55	0.33	K	PA	Black
113850307	1.97	1.27	0.76	3/8-16	0.66	0.33	K	PA	Black
113850309	1.97	1.27	0.76	1/2-13	0.75	0.33	K	PA	Black
113863303	2.48	1.57	0.92	3/8-16	0.66	0.43	K	PA	Black
113863304	2.48	1.57	0.92	1/2-13	0.75	0.43	K	PA	Black

1138 MTC K

RAL 7021
RAL 2004

Forma K: Threaded female brass insert.
PA: Black or Orange reinforced thermoplastic.

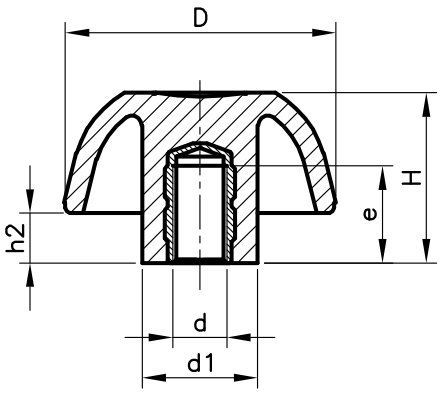

Code	D	H	d1	d	e	h2	Forma	Material	Color
113825344	0.98	0.67	0.49	10-24	0.35	0.22	K	PA	Orange
113825345	0.98	0.67	0.49	1/4-20	0.40	0.22	K	PA	Orange
113832344	1.26	0.79	0.55	10-24	0.35	0.23	K	PA	Orange
113832345	1.26	0.79	0.55	1/4-20	0.40	0.23	K	PA	Orange
113840344	1.57	1.00	0.68	1/4-20	0.40	0.28	K	PA	Orange
113840345	1.57	1.00	0.68	5/16-18	0.55	0.28	K	PA	Orange
113850343	1.97	1.27	0.76	5/16-18	0.55	0.33	K	PA	Orange
113850344	1.97	1.27	0.76	3/8-16	0.66	0.33	K	PA	Orange
113850346	1.97	1.27	0.76	1/2-13	0.75	0.33	K	PA	Orange
113863343	2.48	1.57	0.92	3/8-16	0.66	0.43	K	PA	Orange
113863345	2.48	1.57	0.92	1/2-13	0.75	0.43	K	PA	Orange

1138 MTC K Inox

INOX Stainless Steel

RAL 7021

Forma K Inox: Threaded female stainless-steel AISI-303 insert.
PA: Black reinforced thermoplastic.

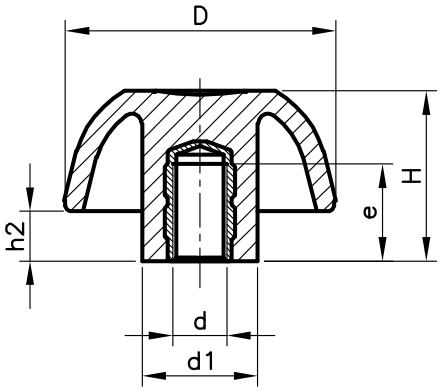

Code	D	H	d1	d	e	h2	Forma	Material	Color
113832302	1.26	0.79	0.55	M6	0.40	0.23	K	PA	Black
113840306	1.57	1.00	0.68	M8	0.55	0.28	K	PA	Black
113850304	1.97	1.27	0.76	M10	0.66	0.33	K	PA	Black
113832314	1.26	0.79	0.55	1/4-20	0.40	0.23	K	PA	Black
113840314	1.57	1.00	0.68	5/16-18	0.55	0.28	K	PA	Black
113850314	1.97	1.27	0.76	3/8-16	0.66	0.33	K	PA	Black

1138 MTC D

RAL 7021
RAL 2004

Forma D: Threaded female brass insert.
PA: Black or Orange reinforced thermoplastic.

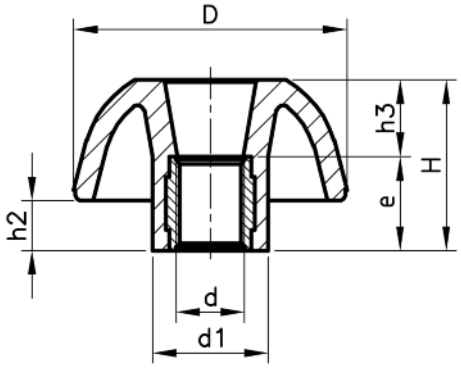

Code	D	H	d1	d	e	h2	h3	Forma	Material	Color
113825404	0.98	0.67	0.49	M4	0.45	0.22	0.21	D	PA	Black
113825405	0.98	0.67	0.49	M5	0.45	0.22	0.21	D	PA	Black
113825401	0.98	0.67	0.49	M6	0.45	0.22	0.21	D	PA	Black
113832405	1.26	0.79	0.55	M5	0.45	0.23	0.25	D	PA	Black
113832401	1.26	0.79	0.55	M6	0.45	0.23	0.25	D	PA	Black
113840401	1.57	1,00	0.68	M6	0.45	0.28	0.47	D	PA	Black
113840403	1.57	1,00	0.68	M8	0.54	0.28	0.47	D	PA	Black
113840402	1.57	1,00	0.68	M10	0.54	0.28	0.47	D	PA	Black
113850401	1.97	1.27	0.76	M8	0.54	0.33	0.74	D	PA	Black
113850402	1.97	1.27	0.76	M10	0.54	0.33	0.74	D	PA	Black
113850405	1.97	1.27	0.76	M12	0.54	0.33	0.74	D	PA	Black
113863401	2.48	1.57	0.92	M10	0.54	0.43	1.05	D	PA	Black
113863402	2.48	1.57	0.92	M12	0.54	0.43	1.05	D	PA	Black
113825444	0.98	0.67	0.49	M4	0.45	0.22	0.21	D	PA	Orange
113825445	0.98	0.67	0.49	M5	0.45	0.22	0.21	D	PA	Orange
113825441	0.98	0.67	0.49	M6	0.45	0.22	0.21	D	PA	Orange
113832445	1.26	0.79	0.55	M5	0.45	0.23	0.25	D	PA	Orange
113832441	1.26	0.79	0.55	M6	0.45	0.23	0.25	D	PA	Orange
113840441	1.57	1,00	0.68	M6	0.45	0.28	0.47	D	PA	Orange
113840443	1.57	1,00	0.68	M8	0.54	0.28	0.47	D	PA	Orange
113840442	1.57	1,00	0.68	M10	0.54	0.28	0.47	D	PA	Orange
113850441	1.97	1.27	0.76	M8	0.54	0.33	0.74	D	PA	Orange
113850443	1.97	1.27	0.76	M10	0.54	0.33	0.74	D	PA	Orange
113850445	1.97	1.27	0.76	M12	0.54	0.33	0.74	D	PA	Orange
113863441	2.48	1.57	0.92	M10	0.54	0.43	1.05	D	PA	Orange
113863442	2.48	1.57	0.92	M12	0.54	0.43	1.05	D	PA	Orange
113825406	0.98	0.67	0.49	8-32	0.45	0.22	0.21	D	PA	Black
113825403	0.98	0.67	0.49	10-24	0.45	0.22	0.21	D	PA	Black
113825402	0.98	0.67	0.49	1/4-20	0.45	0.22	0.21	D	PA	Black
113832404	1.26	0.79	0.55	10-24	0.45	0.23	0.25	D	PA	Black
113832402	1.26	0.79	0.55	1/4-20	0.45	0.23	0.25	D	PA	Black
113840404	1.57	1.00	0.68	1/4-20	0.45	0.28	0.47	D	PA	Black
113840405	1.57	1.00	0.68	5/16-18	0.54	0.28	0.47	D	PA	Black
113850403	1.97	1.27	0.76	5/16-18	0.54	0.33	0.74	D	PA	Black
113850404	1.97	1.27	0.76	3/8-16	0.54	0.33	0.74	D	PA	Black
113850406	1.97	1.27	0.76	1/2-13	0.54	0.33	0.74	D	PA	Black
113863404	2.48	1.57	0.92	3/8-16	0.54	0.43	1.05	D	PA	Black
113863406	2.48	1.57	0.92	1/2-13	0.54	0.43	1.05	D	PA	Black

1138 MTC D

RAL 7021
RAL 2004

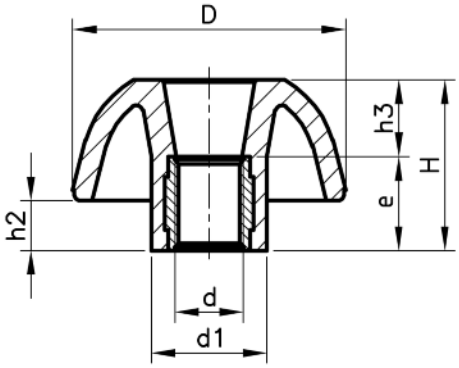

Forma D: Threaded female brass insert.
PA: Black or Orange reinforced thermoplastic.

Code	D	H	d1	d	e	h2	h3	Forma	Material	Color
113825446	0.98	0.67	0.49	8-32	0.45	0.22	0.21	D	PA	Orange
113825443	0.98	0.67	0.49	10-24	0.45	0.22	0.21	D	PA	Orange
113825442	0.98	0.67	0.49	1/4-20	0.45	0.22	0.21	D	PA	Orange
113832444	1.26	0.79	0.55	10-24	0.45	0.23	0.25	D	PA	Orange
113832442	1.26	0.79	0.55	1/4-20	0.45	0.23	0.25	D	PA	Orange
113840444	1.57	1.00	0.68	1/4-20	0.45	0.28	0.47	D	PA	Orange
113840445	1.57	1.00	0.68	5/16-18	0.54	0.28	0.47	D	PA	Orange
113850442	1.97	1.27	0.76	5/16-18	0.54	0.33	0.74	D	PA	Orange
113850444	1.97	1.27	0.76	3/8-16	0.54	0.33	0.74	D	PA	Orange
113850446	1.97	1.27	0.76	1/2-13	0.54	0.33	0.74	D	PA	Orange
113863443	2.48	1.57	0.92	3/8-16	0.54	0.43	1.05	D	PA	Orange
113863446	2.48	1.57	0.92	1/2-13	0.54	0.43	1.05	D	PA	Orange

1138 MTC T

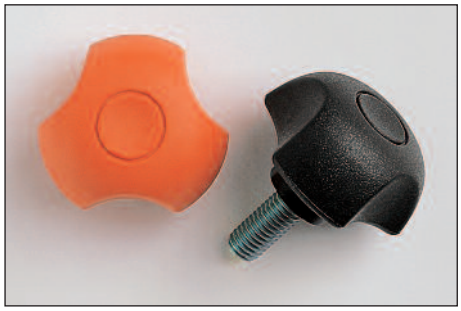

RAL 7021
RAL 2004

Forma T: Treated threaded steel stud.
PA: Black or Orange reinforced thermoplastic.

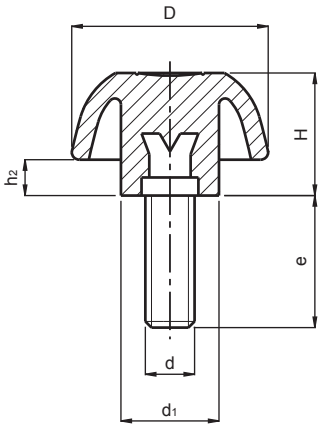

Code	D	H	d1	d	e	h2	Forma	Material	Color
113825502	0.98	0.67	0.49	M4	0.59	0.22	T	PA	Black
113825503	0.98	0.67	0.49	M5	0.79	0.22	T	PA	Black
113825501	0.98	0.67	0.49	M6	0.79	0.22	T	PA	Black
113832515	1.26	0.79	0.55	M5	0.79	0.23	T	PA	Black
113832503	1.26	0.79	0.55	M6	0.39	0.23	T	PA	Black
113832501	1.26	0.79	0.55	M6	0.79	0.23	T	PA	Black
113832504	1.26	0.79	0.55	M6	1.18	0.23	T	PA	Black
113832502	1.26	0.79	0.55	M8	1.06	0.23	T	PA	Black
113832516	1.26	0.79	0.55	M8	1.57	0.23	T	PA	Black
113840511	1.57	1.00	0.68	M6	0.59	0.28	T	PA	Black
113840501	1.57	1.00	0.68	M6	0.79	0.28	T	PA	Black
113840504	1.57	1.00	0.68	M6	1.18	0.28	T	PA	Black
113840505	1.57	1.00	0.68	M6	1.57	0.28	T	PA	Black
113840515	1.57	1.00	0.68	M8	0.59	0.28	T	PA	Black
113840506	1.57	1.00	0.68	M8	0.79	0.28	T	PA	Black
113840507	1.57	1.00	0.68	M8	1.30	0.28	T	PA	Black
113840508	1.57	1.00	0.68	M8	1.85	0.28	T	PA	Black
113840509	1.57	1.00	0.68	M10	0.79	0.28	T	PA	Black
113840503	1.57	1.00	0.68	M10	1.30	0.28	T	PA	Black
113840510	1.57	1.00	0.68	M10	1.73	0.28	T	PA	Black
113850505	1.97	1.27	0.76	M8	0.59	0.33	T	PA	Black
113850502	1.97	1.27	0.76	M8	1.06	0.33	T	PA	Black
113850501	1.97	1.27	0.76	M8	1.57	0.33	T	PA	Black
113850503	1.97	1.27	0.76	M10	1.30	0.33	T	PA	Black
113850504	1.97	1.27	0.76	M10	1.97	0.33	T	PA	Black
113850516	1.97	1.27	0.76	M12	1.57	0.33	T	PA	Black
113850517	1.97	1.27	0.76	M12	2.36	0.33	T	PA	Black
113863503	2.48	1.57	0.92	M10	1.30	0.43	T	PA	Black
113863504	2.48	1.57	0.92	M12	1.57	0.43	T	PA	Black
113863501	2.48	1.57	0.92	M16	2.16	0.43	T	PA	Black
113825542	0.98	0.67	0.49	M4	0.59	0.22	T	PA	Orange
113825543	0.98	0.67	0.49	M5	0.79	0.22	T	PA	Orange
113825541	0.98	0.67	0.49	M6	0.79	0.22	T	PA	Orange
113832548	1.26	0.79	0.55	M5	0.79	0.23	T	PA	Orange
113832543	1.26	0.79	0.55	M6	0.39	0.23	T	PA	Orange
113832541	1.26	0.79	0.55	M6	0.79	0.23	T	PA	Orange
113832544	1.26	0.79	0.55	M6	1.18	0.23	T	PA	Orange
113832542	1.26	0.79	0.55	M8	1.06	0.23	T	PA	Orange
113832549	1.26	0.79	0.55	M8	1.57	0.23	T	PA	Orange
113840552	1.57	1.00	0.68	M6	0.59	0.28	T	PA	Orange
113840541	1.57	1.00	0.68	M6	0.79	0.28	T	PA	Orange

1138 MTC T

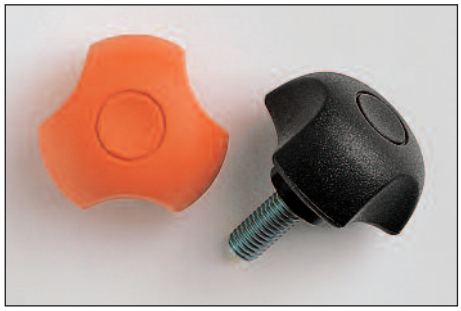

RAL 7021
RAL 2004

Forma T: Treated threaded steel stud.
PA: Black or Orange reinforced thermoplastic.

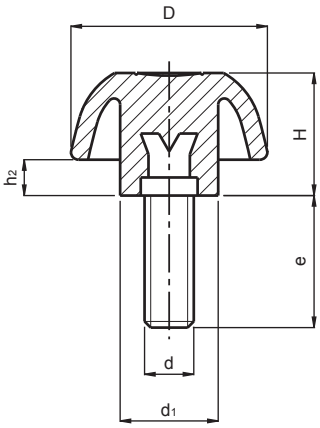

Code	D	H	d1	d	e	h2	Forma	Material	Color
113840544	1.57	1.00	0.68	M6	1.18	0.28	T	PA	Orange
113840545	1.57	1.00	0.68	M6	1.57	0.28	T	PA	Orange
113840553	1.57	1.00	0.68	M8	0.59	0.28	T	PA	Orange
113840546	1.57	1.00	0.68	M8	0.79	0.28	T	PA	Orange
113840547	1.57	1.00	0.68	M8	1.30	0.28	T	PA	Orange
113840548	1.57	1.00	0.68	M8	1.85	0.28	T	PA	Orange
113840549	1.57	1.00	0.68	M10	0.79	0.28	T	PA	Orange
113840543	1.57	1.00	0.68	M10	1.30	0.28	T	PA	Orange
113840542	1.57	1.00	0.68	M10	1.73	0.28	T	PA	Orange
113850547	1.97	1.27	0.76	M8	0.59	0.33	T	PA	Orange
113850542	1.97	1.27	0.76	M8	1.06	0.33	T	PA	Orange
113850541	1.97	1.27	0.76	M8	1.57	0.33	T	PA	Orange
113850543	1.97	1.27	0.76	M10	1.30	0.33	T	PA	Orange
113850544	1.97	1.27	0.76	M10	1.97	0.33	T	PA	Orange
113850551	1.97	1.27	0.76	M12	1.57	0.33	T	PA	Orange
113850552	1.97	1.27	0.76	M12	2.36	0.33	T	PA	Orange
113863543	2.48	1.57	0.92	M10	1.30	0.43	T	PA	Orange
113863544	2.48	1.57	0.92	M12	1.57	0.43	T	PA	Orange
113863545	2.48	1.57	0.92	M16	2.16	0.43	T	PA	Orange
113825506	0.98	0.67	0.49	10-24	0.75	0.22	T	PA	Black
113825507	0.98	0.67	0.49	1/4-20	0.50	0.22	T	PA	Black
113825508	0.98	0.67	0.49	1/4-20	0.75	0.22	T	PA	Black
113832511	1.26	0.79	0.55	1/4-20	0.50	0.23	T	PA	Black
113832512	1.26	0.79	0.55	1/4-20	0.75	0.23	T	PA	Black
113832509	1.26	0.79	0.55	1/4-20	1.25	0.23	T	PA	Black
113832517	1.26	0.79	0.55	5/16-18	0.75	0.23	T	PA	Black
113832518	1.26	0.79	0.55	5/16-18	1.25	0.23	T	PA	Black
113840532	1.57	1.00	0.68	1/4-20	0.50	0.28	T	PA	Black
113840526	1.57	1.00	0.68	1/4-20	0.75	0.28	T	PA	Black
113840527	1.57	1.00	0.68	1/4-20	1.25	0.28	T	PA	Black
113840528	1.57	1.00	0.68	5/16-18	0.75	0.28	T	PA	Black
113840529	1.57	1.00	0.68	5/16-18	1.00	0.28	T	PA	Black
113840523	1.57	1.00	0.68	5/16-18	1.50	0.28	T	PA	Black
113840530	1.57	1.00	0.68	3/8-16	1.00	0.28	T	PA	Black
113840531	1.57	1.00	0.68	3/8-16	1.50	0.28	T	PA	Black
113840524	1.57	1.00	0.68	3/8-16	1.75	0.28	T	PA	Black
113850515	1.97	1.27	0.76	5/16-18	1.00	0.33	T	PA	Black
113850511	1.97	1.27	0.76	5/16-18	1.75	0.33	T	PA	Black
113850513	1.97	1.27	0.76	3/8-16	1.00	0.33	T	PA	Black

Code	D	H	d1	d	e	h2	Forma	Material	Color
113850514	1.97	1.27	0.76	3/8-16	1.50	0.33	T	PA	Black
113850512	1.97	1.27	0.76	3/8-16	2.00	0.33	T	PA	Black
113850518	1.97	1.27	0.76	1/2-13	1.50	0.33	T	PA	Black
113850519	1.97	1.27	0.76	1/2-13	2.00	0.33	T	PA	Black
113863506	2.48	1.57	0.92	3/8-16	1.00	0.43	T	PA	Black
113863507	2.48	1.57	0.92	3/8-16	2.00	0.43	T	PA	Black
113863508	2.48	1.57	0.92	1/2-13	1.50	0.43	T	PA	Black
113863509	2.48	1.57	0.92	1/2-13	2.00	0.43	T	PA	Black
113825544	0.98	0.67	0.49	10-24	0.75	0.22	T	PA	Orange
113825547	0.98	0.67	0.49	1/4-20	0.50	0.22	T	PA	Orange
113825548	0.98	0.67	0.49	1/4-20	0.75	0.22	T	PA	Orange
113832546	1.26	0.79	0.55	1/4-20	0.50	0.23	T	PA	Orange
113832547	1.26	0.79	0.55	1/4-20	0.75	0.23	T	PA	Orange
113832545	1.26	0.79	0.55	1/4-20	1.25	0.23	T	PA	Orange
113832550	1.26	0.79	0.55	5/16-18	0.75	0.23	T	PA	Orange
113832551	1.26	0.79	0.55	5/16-18	1.25	0.23	T	PA	Orange
113840560	1.57	1.00	0.68	1/4-20	0.50	0.28	T	PA	Orange
113840554	1.57	1.00	0.68	1/4-20	0.75	0.28	T	PA	Orange
113840555	1.57	1.00	0.68	1/4-20	1.25	0.28	T	PA	Orange
113840556	1.57	1.00	0.68	5/16-18	0.75	0.28	T	PA	Orange
113840557	1.57	1.00	0.68	5/16-18	1.00	0.28	T	PA	Orange
113840550	1.57	1.00	0.68	5/16-18	1.50	0.28	T	PA	Orange
113840558	1.57	1.00	0.68	3/8-16	1.00	0.28	T	PA	Orange
113840559	1.57	1.00	0.68	3/8-16	1.50	0.28	T	PA	Orange
113840551	1.57	1.00	0.68	3/8-16	1.75	0.28	T	PA	Orange
113850550	1.97	1.27	0.76	5/16-18	1.00	0.33	T	PA	Orange
113850545	1.97	1.27	0.76	5/16-18	1.75	0.33	T	PA	Orange
113850548	1.97	1.27	0.76	3/8-16	1.00	0.33	T	PA	Orange
113850549	1.97	1.27	0.76	3/8-16	1.50	0.33	T	PA	Orange
113850546	1.97	1.27	0.76	3/8-16	2.00	0.33	T	PA	Orange
113850553	1.97	1.27	0.76	1/2-13	1.50	0.33	T	PA	Orange
113850554	1.97	1.27	0.76	1/2-13	2.00	0.33	T	PA	Orange
113863546	2.48	1.57	0.92	3/8-16	1.00	0.43	T	PA	Orange
113863547	2.48	1.57	0.92	3/8-16	2.00	0.43	T	PA	Orange
113863548	2.48	1.57	0.92	1/2-13	1.50	0.43	T	PA	Orange
113863549	2.48	1.57	0.92	1/2-13	2.00	0.43	T	PA	Orange

1138 MTC T INOX

INOX Stainless Steel

RAL 7021

Forma T Inox: Stainless-steel AISI-303 bolt.
PA: Black reinforced thermoplastic.

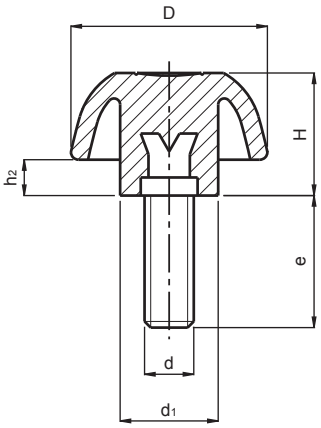

Code	D	H	d1	d	e	h2	Forma	Material	Color
113832507	1.26	0.79	0.55	M6	0.59	0.23	T	PA	Black
113840521	1.57	1.00	0.68	M6	0.59	0.28	T	PA	Black
113840518	1.57	1.00	0.68	M8	0.79	0.28	T	PA	Black
113840519	1.57	1.00	0.68	M8	1.57	0.28	T	PA	Black
113850508	1.97	1.27	0.76	M10	0.79	0.33	T	PA	Black
113850509	1.97	1.27	0.76	M10	1.18	0.33	T	PA	Black
113863505	2.48	1.57	0.92	M12	1.18	0.43	T	PA	Black